Fig. 3280
Straight TRV

FEATURES AND BENEFITS

- Regulates the fluid flow to radiators of the central heating system
- Prevents unwanted temperature rises and achieves considerable energy savings
- Suitable for installations where durability and rugged construction are predominant

MATERIAL SPECIFICATION

Component	Material	Specification BS EN
Body	Brass (Chrome Plated)	BS EN 12164 CW617N
Valve Insert Assembly	EPDM Valve Disc	
T80 Std Wheel Head	Thermoplastic	ABS
Tailpiece Ring	Brass	BS EN 12164 CW617N
Tailpiece	Brass	BS EN 12164 CW617N
Compression Olive	Brass	BS EN 12164 CW602N
Compression Adaptor	Brass	BS EN 12164 CW614N
Hydraulic Seals	Rubber	EPDM

DIMENSIONAL DRAWINGS

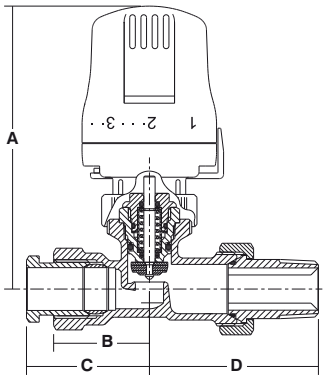

DIMENSIONS AND WEIGHTS

Nom Size	mm	15	22
A	mm	100	100
B	mm	34	40
C	mm	44	51
D	mm	60	65
Body Weight	kg	0.391	0.580

Every effort has been made to ensure that the information contained in this publication is accurate at the time of publishing. Hattersley Ltd assumes no responsibility or liability for typographical errors or omissions or for any misinterpretation of the information within the publication and reserves the right to change without notice.

Technical Helpline: 0845 604 1790
E: tech-enquiries@hattersley.com W: www.hattersley.com